Cortex Code:

Your AI Coding Assistant in Snowsight

Caleb Alexander

Solution Engineer

© 2026 Snowflake Inc. All Rights Reserved

Safe Harbor and Disclaimers

Other than statements of historical fact, all statements contained in these materials and any accompanying oral commentary (collectively, the “Materials”) are forward-looking statements within the meaning of Section 27A of the Securities Act of 1933, as amended, and Section 21E of the Securities Exchange Act of 1934, as amended, including statements regarding (i) Snowflake’s business strategy, plans, opportunities, or priorities; (ii) Snowflake’s new or enhanced products, services, and technology offerings, including those that are under development or not generally available; (iii) market size and growth, trends, and competitive considerations; (iv) Snowflake’s vision, strategy, and expected benefits relating to artificial intelligence (“AI”), Snowpark, Snowflake Marketplace, the AI Data Cloud, and AI Data Clouds for specific industries or product categories, including the expected benefits and network effects of the AI Data Cloud; and (v) the integration, interoperability, and availability of Snowflake’s products, services, or technology offerings with or on third-party platforms or products, including public cloud platforms. These forward-looking statements are subject to a number of known and unknown risks, uncertainties, and assumptions, including those described under the heading “Risk Factors” and elsewhere in the Annual Reports on Form 10-K and the Quarterly Reports on Form 10-Q that Snowflake files with the Securities and Exchange Commission from time to time. In light of these risks, uncertainties, and assumptions, the future events and trends discussed in the Materials may not occur, and actual results could differ materially and adversely from those expressed or implied in the forward-looking statements. As a result, you should not rely on any forwarding-looking statements as predictions of future events. Forward-looking statements speak only as of the date the statements are first made and are based on information available to Snowflake at the time those statements are made and/or management's good faith belief as of that time. Except as required by law, we undertake no obligation, and do not intend, to update the forward-looking statements in these Materials.

Any future product or roadmap information (collectively, the “Roadmap”) is intended to outline general product direction. The Roadmap is not a commitment, promise, or legal obligation for Snowflake to deliver any future products, features, or functionality; and is not intended to be, and shall not be deemed to be, incorporated into any contract. The actual timing of any product, feature, or functionality that is ultimately made available may be different from what is presented in the Roadmap. The Roadmap information should not be used when making a purchasing decision. In case of conflict between the information contained in the Materials and official Snowflake documentation, official Snowflake documentation should take precedence over these Materials. Further, note that Snowflake has made no determination as to whether separate fees will be charged for any future products, features, and/or functionality which may ultimately be made available. Snowflake may, in its own discretion, choose to charge separate fees for the delivery of any future products, features, and/or functionality which are ultimately made available.

The Materials may contain information provided by third-parties. Snowflake has not independently verified this information, and usage of this information does not mean or imply that Snowflake has adopted this information as its own or independently verified its accuracy.

© 2026 Snowflake Inc. All rights reserved. Snowflake, the Snowflake logo, and all other Snowflake product, feature and service names mentioned in the Materials are registered trademarks or trademarks of Snowflake Inc. in the United States and other countries. All other brand names or logos mentioned or used in the Materials are for identification purposes only and may be the trademarks of their respective holder(s). Snowflake may not be associated with, or be sponsored or endorsed by, any such holder(s).

Agenda

- Setup: load demo data
- CoCo UI: panel, toolbar & context
- Notebook from a single prompt
- Auto-refreshing Dynamic Table
- Streamlit dashboard
- Semantic View + AI Agent
- Partner: phData

tinyurl.com/CoCo-Pawcore

© 2026 Snowflake Inc. All Rights Reserved

The Problem

Self-Service Gap

BUSINESS USERS CAN'T FIX THEIR OWN QUERIES

Build Cycle Friction

EVERY DASHBOARD REQUEST IS A SPRINT TICKET

Stale Insights

ANALYSIS IS ONLY ACCURATE THE DAY IT RUNS

© 2026 Snowflake Inc. All Rights Reserved

Cortex Code

Snowflake-native AI coding agent

UNDERSTANDS SNOWFLAKE

Has the latest knowledge of your specific data catalog: databases, schemas, tables, semantic models and more

INTELLIGENCE

IS CONTEXT AWARE

Knows where you are in the UI, what data you're working with, and retains your conversational history as you navigate

RELEVANCE

AUTOMATES COMPLEX TASKS

Intelligently optimizes your requests to solve real jobs, from building an application to managing cost or governing data

EFFICIENCY

IS SECURE BY DESIGN

Adheres to Snowflake RBAC, ensuring it only sees and acts on the data and objects you have access to

GOVERNANCE

© 2025 Snowflake Inc. All Rights Reserved

What Teams Are Doing With CoCo in Snowsight

Screenshot Error Repair

Interactive Notebooks

Live Dashboards

Auto-Refreshing Pipelines

Conversational Analytics

Iterate in Real Time

Cortex Code isn't just about writing code. It's about removing the distance between a question and an answer.

© 2026 Snowflake Inc. All Rights Reserved

PawCore

PET HEALTH & FITNESS TRACKER

SmartCollar V2

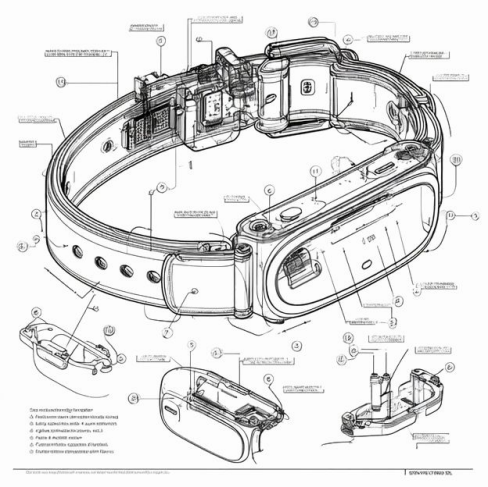

© 2026 Snowflake Inc. All Rights Reserved

PawCore
PET HEALTH & FITNESS TRACKER

SmartCollar V2

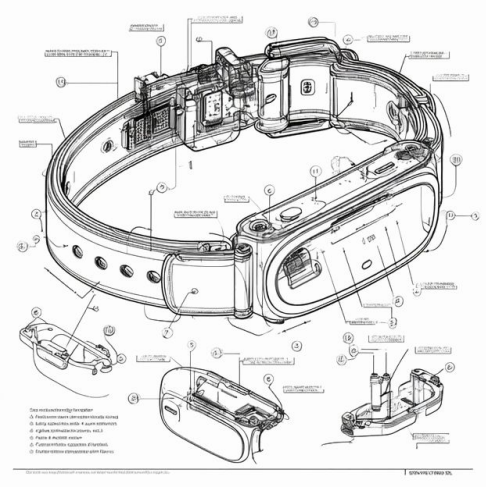

'Is my support team ready for the volume V2 will bring?
Where are my bottlenecks? Which regions are already stretched thin?

© 2026 Snowflake Inc. All Rights Reserved

LIVE DEMO

© 2026 Snowflake Inc. All Rights Reserved

PARTNER
phData

© 2026 Snowflake Inc. All Rights Reserved

Cortex Code UI

In About 20 mins, We...

Fixed a broken query with CoCo — no SQL knowledge required.
Built a multi-cell support operations notebook from a single prompt
Created an auto-refreshing Dynamic Table pipeline with zero orchestration
Deployed a live Streamlit dashboard the CX team can bookmark
Stood up a Semantic View and Intelligence Agent for ad-hoc investigation

Cortex Code isn't about replacing engineers. It's about:

Principle	What It Means
Speed	**Screenshot to fix in seconds, not hours**
Self-Service	**Business users unblock themselves**
Accessibility	**Natural language replaces SQL fluency**
Always Current	**Dynamic Tables + live dashboards, never stale**

© 2026 Snowflake Inc. All Rights Reserved

Cortex Code UI

Your Next Steps

1. Open the CoCo panel: create a workspace, add a SQL file — it's already there
2. Screenshot your next error: paste it in, type "fix this" — you'll be surprised
3. Build something from scratch: a notebook, a Dynamic Table, a Streamlit app — one prompt
4. Share the Quickstart Guide with your team — see if they can build something in 10 minutes

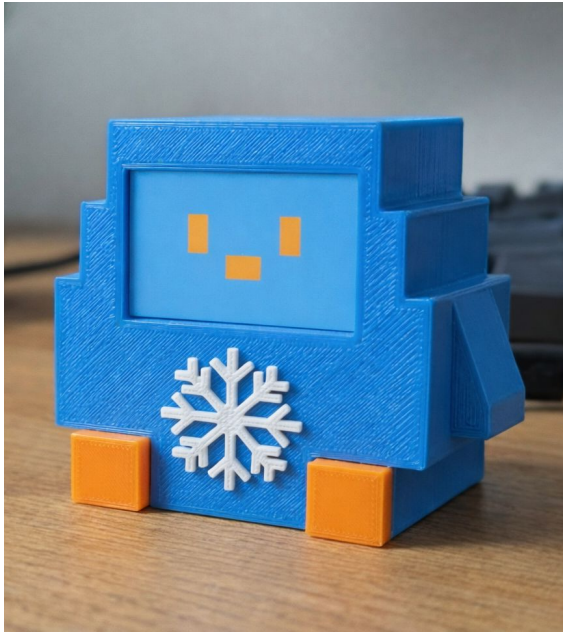

© 2026 Snowflake Inc. All Rights Reserved

THANK YOU

snowflake®

© 2025 Snowflake Inc. All Rights Reserved